EXPANDERS

PROCESS

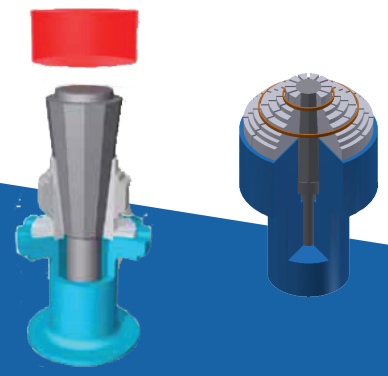

Principle of an Expander

The part to be expanded is positioned around the collapsed dies. Cone and drawbar are in the extended position on pull type, and retracted position on push type.

As the drawbar pulls the cone down, or pushes up, the inclined surfaces of the cone force the jaws and dies outward. Outward expansion stretches the part past its yield point to the desired shape and size.

When the part reaches the desired shape and size, the drawbar/cone assembly returns, and the jaws and dies return to their original position. The part, formed and sized to close tolerances, is ready to be unloaded.

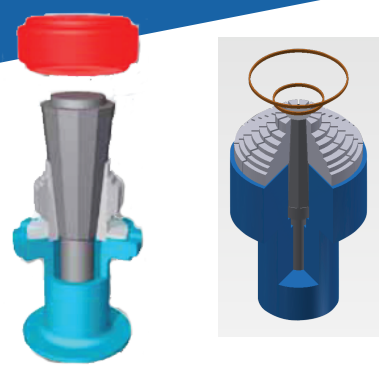

Range of Specifications Expanding

- Tonnage: Less than 2 ton to over 3600 ton
- Diameter: 25 mm to over 8 m
- Height: 6 mm to over 5 m
- Wall Thickness: 1,5 mm to over 305 mm
- Materials: Steel, Aluminum, Nickel-based Aerospace Alloys, Titanium, Stainless Steel, etc
- Custom Ranges Available

info@fontijnegrotnes.com
WWW.FONTIJNEGROTNES.COM

FONTIJNE GROTNES

Electric Motor and Generator Housings

The production process to make housings for electric motors, alternators and generators often requires machining to bring the inside diameter and roundness to such a tolerance that the internals of the electric equipment will fit properly. Manufacturers use Fontijne Grotnes Expanders to calibrate electric motor housings over the complete length to the required tolerances, thereby eliminating additional machining operations.

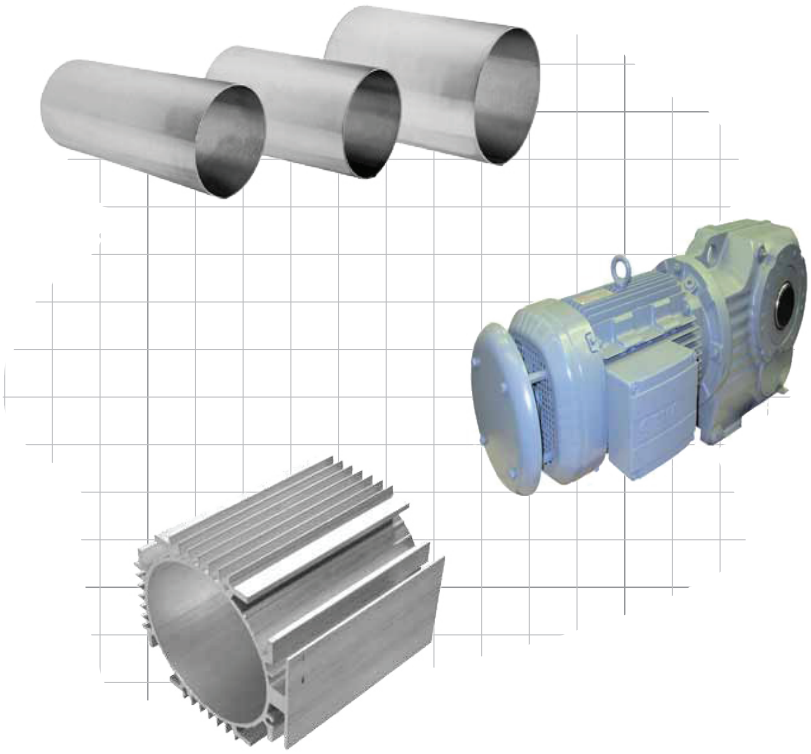

Applications

Fontijne Grotnes Expanders are used for calibrating different sizes of generator housings. The pre-shape is a rolled and welded steel cylinder that requires calibration to make assembly possible.

Fontijne Grotnes Expanders are used for sizing electric motor housings made from extruded aluminum profile. After the extrusion process, the internal diameter and the out-of-roundness often need to be calibrated to be able to fit the stator inside the housing.

Benefits

- Expansion is a highly accurate and repeatable forming process with a shorter cycle time than comparable forming techniques.
- Fontijne Grotnes Expanders make it possible to size and form profiles in a wide range of materials.
- Fontijne Grotnes has knowledge of software programs to offer simulations regarding your forming processes.
- By using an Expander less material is needed and the machining time is dramatically reduced, also there is virtually no limit to the materials that can be formed or sized.

info@fontijnegrotnes.com
WWW.FONTIJNEGROTNES.COM